Exam Date & Time: 25-Jun-2022 (09:00 AM - 12:00 PM)

MANIPAL ACADEMY OF HIGHER EDUCATION

SECOND SEMESTER B.TECH. EXAMINATIONS (MIT BANGALORE) - JUNE/JULY 2022
SUBJECT : CIE_1051 - MECHANICS OF SOLIDS

MECHANICS OF SOLIDS [CIE-1051]

Marks: 50 **Duration: 180 mins.**

A

Answer all the questions.

1A) i) Explain the principle of transmissibility with the help of a neat sketch.
ii) The resultant **R** of the three forces acts horizontally through the point E. If **P = 10 kN** and each square is 2m x 2m, determine the magnitude of the forces Q and S. (5)

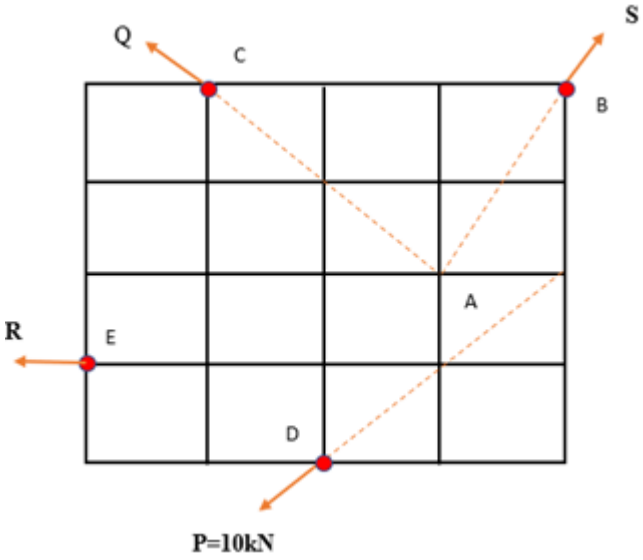

1B) A block of weight 900 N is resting on an inclined surface as shown in figure. The block is also subjected to an external force of 100 N. If the coefficient of friction between the contact surfaces is 0.25,
i) What is the force 'P' required to stop the block from sliding down the plane?
ii) What is the force 'P' required to push the block up the plane? (5)

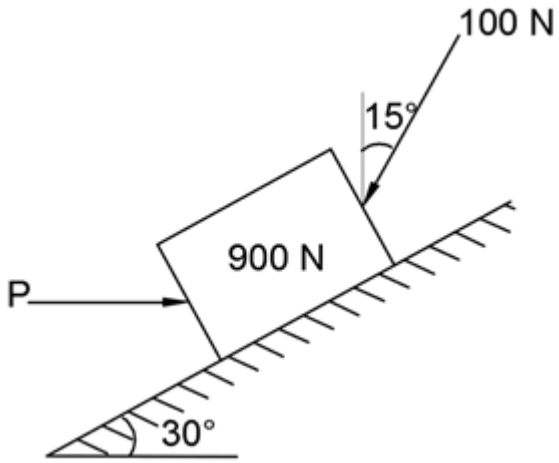

2A) A horizontal force of 300 N is applied at the point C and a weight is attached at the point B to maintain the cable ABCD in position as shown in the figure. Determine the (3)

required weight (**W**) at the point B and tension in each portion of the cable.

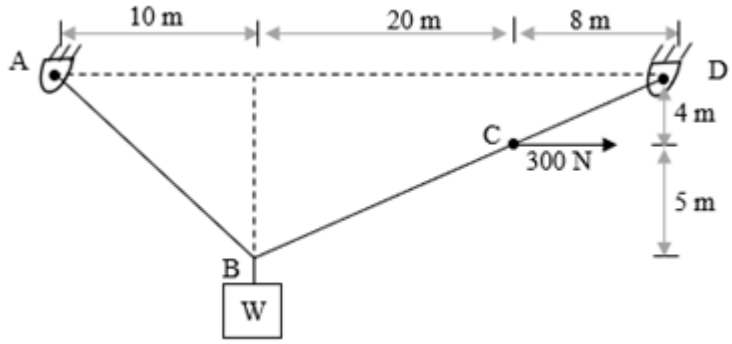

2B) Obtain the centroidal distance of a rectangle about its base by the principle of moments. (2)

2C) Determine the second moment of area for the shaded region w.r.to axis X.

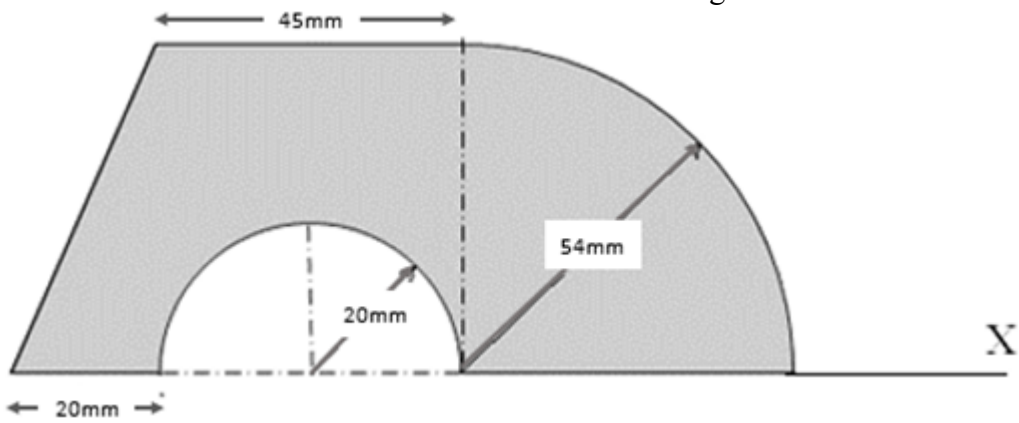

(5)

3A) Locate the centroid of the shaded region with respect to X-X and Y-Y axis as shown in the figure.

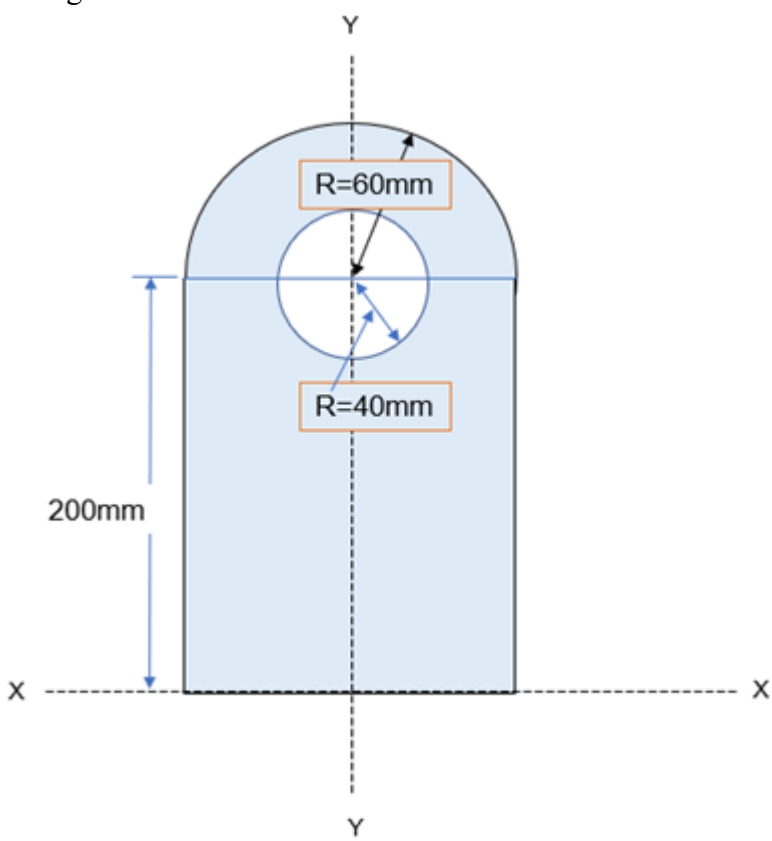

(3)

3B) A thin cylindrical shell is 3.5m long and 1.2m in internal diameter. It is subjected to internal pressure of 1.4 MPa. If the thickness of the sheet is 10mm, find the circumferential stress and longitudinal stress. Take E=200 GPa and μ= 0.3. (2)

3C) A rectangular bar of 300mm length is 100 mm wide and 30mm thick. It is loaded with an axial tensile load of 200 kN, together with a normal compressive force of 500kN on the face 100mm x 300 mm and a tensile force 400 kN on the face 30mm x 300mm. Calculate the Poisson's ratio, strain in all the three directions if the change in volume is 195.408 mm^3 and also find the change in dimension in the direction of 500 kN load. Take E = 200 GPa. (5)

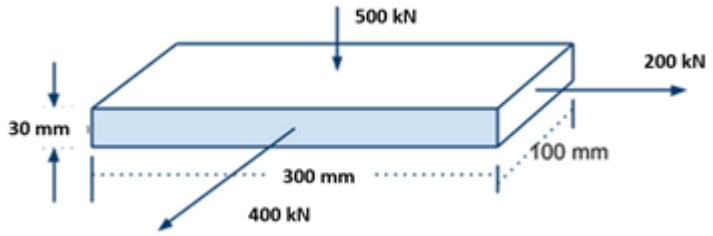

4A) i) Derive the relationship between Young's modulus (E) and Bulk modulus (K).
ii) Explain the state of simple shear stress. (5)

4B) A bar made up of three different materials is shown in figure. All segments of the bar are of 10 mm thickness and subjected to axial loads as indicated. Determine the stresses developed in the segments AB and BC and the stresses developed at the ends of the tapered bar. Also determine the total deformation of the bar. Consider E_{al} = 70 GPa, E_{st} = 210 GPa and E_{br} = 100 GPa. (5)

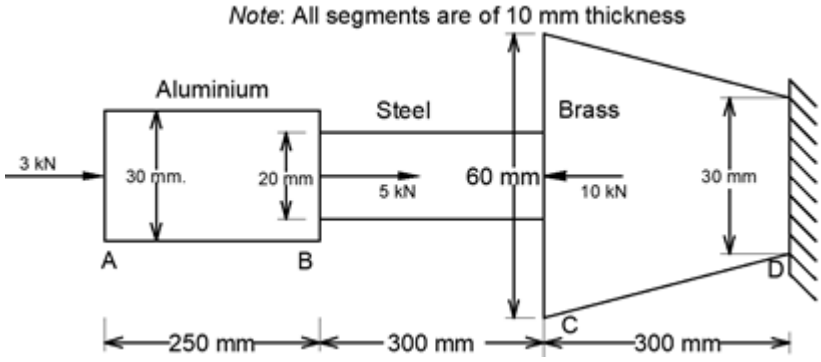

5A) A steel hollow tube of internal diameter 50mm and thickness 10mm has a solid rod of copper of diameter 50mm placed snuggly inside it. The compound bar thus formed is rigidly joined at their contact surfaces at a temperature of 20° C. Determine the stresses in steel and copper if the temperature is raised to 40° C. Take E_{steel} = 200GPa and E_{copper} = 100GPa. Also, temperature expansion coefficient of steel and copper are 1x 10^{-6}/ ° C and 1.5x10^{-6}/ ° C respectively. (5)

5B) A hollow steel pipe of internal diameter 100mm is filled with concrete inside. What must be the thickness of the steel pipe required such that under the action of axial force P, both steel and concrete will carry equal load ? E_{steel} = 200GPa and $E_{concrete}$ = 30GPa. (3)

5C) Explain temperature stress with an example. (2)

-----End-----